Prepared by: Zach Perkovich
04/02/2026

Pritchard Auto Company | 980 Highway 18 East Britt Iowa | 504238700

2027 F-750 Diesel SuperCab Base (X7D)

Price Level: 715 | Quote ID: 26VL106

As Configured Vehicle

Code	Description	MSRP
Base Vehicle		
X7D	Base Vehicle Price (X7D)	$83,170.00
Engines		
99X	6.7L Power Stroke V8 Turbo Diesel - 330 HP @ 2600 RPM *850 lb.-ft. torque @ 1500 RPM.*	$3,495.00
425	50-State Emissions	N/C
41H	Engine Block Heater, Phillips, 120 Volt/750 Watt *Includes removable grille cover.*	$155.00
98R	Active Regen Control *Allows Driver to Inhibit Automatic Regen until Regen can be performed in a Safe location.*	$205.00
Transmissions		
44D	Ford TorqShift HD 10-Speed Automatic - with PTO Provision *Includes tow/haul.*	STD
Front Wheels & Tires		
643	Wheels, Front 22.5" X 8.25" White Powder Coated Steel, 10-Hole *(285.75MM BC) hub piloted, flanged nut, metric mount, 8.25 DC rims; with steel hubs.*	STD
T2A	Tires, Front Two 11R22.5H Goodyear Fuel Max RSA (497 Rev/Mile)	STD
Rear Wheels & Tires		
663	Wheels, Rear 22.5" X 8.25" White Powder Coated Steel, 10-Hole *(285.75MM BC) hub piloted, flanged nut, metric mount, 8.25 DC rims; with steel hubs.*	STD
R2A	Tires, Rear Four 11R22.5H Goodyear Fuel Max RSA (497 Rev/Mile)	STD
Brakes		

Prices and content availability as shown are subject to change and should be treated as estimates only. Actual base vehicle, package and option pricing may vary from this estimate because of special local pricing, availability or pricing adjustments not reflected in the dealer's computer system. See salesperson for the most current information.

2027 F-750 Diesel SuperCab Base (X7D)

Price Level: 715 | Quote ID: 26VL106

As Configured Vehicle (cont'd)

Code	Description	MSRP
67A	Air Brakes (4 WHEEL DRUM) - Straight Truck w/Traction Control *Meritor Q-Plus with ABS, Bendix Anti-Lock Brake System, 4-channel. Includes 15" x 4" front brakes, dual direct reading air pressure gauges, brake lines color coded nylon, Bendix 13.2 CFM capacity air compressor, instrument panel mounted yellow knob parking brake control valve, automatic slack adjusters front and rear, two rear spring parking air brake chambers mounted on front of rear axle, three drain valves and two air tanks (Reference Body Builders Book for location). Rear brake size and components dependent upon axle selection. Uses existing ABS system to minimize wheel slipping during acceleration. Usage determined by the air brake package selected. (Not recommended with Hi-Rail Train Systems). Deletes hand operated park brake lever.* *Includes:* *- Air Dryer, Bendix AD/IS w/Heater* *Mounted left frame rail (for Hydraulic brake applications that include stand alone engine air compressor).*	$2,530.00
18A	Electronic Stability Control DELETE *Deletes the standard ESC feature.*	-$290.00
62D	Air Dryer, Bendix AD/IS w/Heater *Mounted left frame rail (for Hydraulic brake applications that include stand alone engine air compressor).*	Included
159	Trailer Connection Socket - 7-Way, Wired For Turn Signals Combined with Stop *Mounted at rear of frame, for combined trailer stop, tail, turn (compatible with trailers that use combined stop, tail, turn lights).*	$100.00

Front Axle and Suspension

43P	12,000 Lb. Cap. Non-Driving - Dana E-1202I - I-Beam Type	$525.00
61E	Taper-Leaf Springs, Parabolic - 13,200 Lb. Cap *3-leaf, 62" x 3.15". Also includes, standard duty, dual, double acting shock absorbers.*	$365.00
60A	Lube, Front Axle, EmGard 50W, Synthetic Oil	$50.00

Rear Axle and Suspension

475	21,000 Lb. Single Reduction - Open - Dana / Spicer 21060S *NOTE: When specifying an axle ratio, check performance guidelines for startability and gradeability.*	STD
68R	Multi-Leaf Springs - 23,000 Lb. Cap *For 21,000 lb., 23,000 lb. and 26,000 lb. rear axles. Includes 4,500 lb auxiliary rubber spring.*	$230.00

Prices and content availability as shown are subject to change and should be treated as estimates only. Actual base vehicle, package and option pricing may vary from this estimate because of special local pricing, availability or pricing adjustments not reflected in the dealer's computer system. See salesperson for the most current information.

2027 F-750 Diesel SuperCab Base (X7D)

Price Level: 715 | Quote ID: 26VL106

As Configured Vehicle (cont'd)

Code	Description	MSRP
607	Lube, Rear Axle, EmGard 75W-90, Synthetic Oil	$100.00
X4G	4.88 Axle Ratio	N/C
Wheelbase		
215WB	215" Wheelbase/120" CA/75" AF/329" OAL	$320.00
Frame		
539	Single Channel - Straight 'C' 20.11 SM, 120,000 PSI *2,413,200 RBM. Heat treated alloy steel; 10.375" x 3.705" x 0.438" (263.5mm x 94.1mm x 11.1mm).*	$1,075.00
Exhaust		
91G	Under Cab, Right Side Outlet, Switchback-Style *Single, horizontal muffler, right side, under cab, outside of frame rail with rear discharge.*	STD
Fuel Tanks		
65E	Fuel Tank - LH 65 Gallon Rectangular - Aluminum	STD
Electrical / Alternator / Battery		
17A	Extra Heavy Duty Alternator - 12-Volt, 240 Amps	$410.00
63B	Battery - Two 900 CCA, 1800 Total, Includes Steel Battery Box *12Volt, Motorcraft.*	$120.00
59C	Body Builder Wiring - At End of Frame, Combined - (ILO Standard - Back of Cab Combined) *Includes sealed connectors for 2 ground circuits, with combined left/stop, combined right/stop, stop lamps, back up lamps. Also includes 2 additional pass through wires to cab.*	$135.00
17M	Back-Up Alarm - Electric, 102 dBA	$110.00

Prices and content availability as shown are subject to change and should be treated as estimates only. Actual base vehicle, package and option pricing may vary from this estimate because of special local pricing, availability or pricing adjustments not reflected in the dealer's computer system. See salesperson for the most current information.

2027 F-750 Diesel SuperCab Base (X7D)

Price Level: 715 | Quote ID: 26VL106

As Configured Vehicle (cont'd)

Code	Description	MSRP
962	Daytime Running Lamps (Not Configurable)	$25.00
86M	Vehicle Integration System 1.0	$320.00
16V	Voltmeter *Available in message center.*	$100.00
61A	Embedded Modem Delete This option MUST be added to each order for the duration of the model year. *This will be a forced option on all orders and builds from start of production.*	-$75.00

Seats

88A	30/0/30 Fixed Driver & Fixed Passenger w/Consolette - Vinyl	STD
87B	60/40 Rear Bench Seat w/Bolster and Flip-Up Cushion *Trim will match selected driver seat material.*	Included

Cab Interior

600A	Preferred Equipment Package 600A *Includes:* *- Bumper, Front - Black, Full Width* *- Wheel Seals, Front - Oil Lubricated, SKF ScotSeal PlusXL Seals* *- Wheel Seals, Rear - Oil Lubricated, SKF ScotSeal PlusXL Seals* *- Manual Regen Initiation - Driver Interface in Message Center* *- Engine Exhaust Brake* *- Painted Grille - Plastic* *- Lights - Roof Marker/Clearance - Amber Lenses, 5 Lights* *- Tow Hooks, Front (2) - Frame-Mounted, Painted Black* *- Four Body Builder Switches - Mounted in Center Instrument Panel* *With connector access located in engine compartment. Amperages vary by switch: 10, 15, 25, 25.* *- Floor Covering - Black Vinyl* *- Intelligent Oil Life Monitor* *- Steering Column - Tilt / Telescoping* *- Steering Wheel - Black PVC w/Integral Cruise Control Switches, Includes Audio Controls*	N/C
90A	Appearance Group *Includes front-mounted overhead console with dual sunglass bins and integral front map reading lights.* *Includes:* *- Chrome Trimmed Air Registers w/Positive Shut-Off* *- 60/40 Rear Bench Seat w/Bolster and Flip-Up Cushion* *Trim will match selected driver seat material.* *- Power Equipment Group - (Included in (90A) Appearance Group)* *Includes power front side windows, manual rear side windows, power door locks and door trim panel.*	$910.00

Prices and content availability as shown are subject to change and should be treated as estimates only. Actual base vehicle, package and option pricing may vary from this estimate because of special local pricing, availability or pricing adjustments not reflected in the dealer's computer system. See salesperson for the most current information.

2027 F-750 Diesel SuperCab Base (X7D)

Price Level: 715 | Quote ID: 26VL106

As Configured Vehicle (cont'd)

Code	Description	MSRP
	- Remote Keyless Entry	
90P	Power Equipment Group - (Included in (90A) Appearance Group) *Includes power front side windows, manual rear side windows, power door locks and door trim panel.* *Includes:* *- Remote Keyless Entry*	Included
55P	110 A/C Outlet - in Lower Center Finish Panel	$130.00
588	Radio: AM/FM Stereo w/2 Speakers, USB Input, Clock Display and Bluetooth	STD
Cab Exterior		
59A	Horn, Air - Black, Single Trumpet *Air solenoid operated, chassis mounted on rail back of bumper.*	$90.00
54R	Mirrors, Dual - Heated & Motorized Rectangular, XL2020 - 102" Width *Integral spot mirror, sail type, solid black finish.*	$215.00
Miscellaneous		
PAINT	Paint Type - Environmentally Friendly, "3 - Wet System"	STD
Exterior Color		
YZ_01	Oxford White	N/C
Interior Color		
E_01	Gray	N/C

SUBTOTAL	$94,520.00
Fuel Charge (12)	$0.00
Destination Charge	$2,495.00
TOTAL	$97,015.00

Prices and content availability as shown are subject to change and should be treated as estimates only. Actual base vehicle, package and option pricing may vary from this estimate because of special local pricing, availability or pricing adjustments not reflected in the dealer's computer system. See salesperson for the most current information.

2027 F-750 Diesel SuperCab Base (X7D)

Price Level: 715 | Quote ID: 26VL106

Available Options

Selected	Code	Description	MSRP
General Info			
☐	ORDER1	Initial Order Date: 10/15/2025	N/C
Engines			
☐	99C *800 lb.-ft. torque @ 1500 RPM.*	6.7L Power Stroke V8 Turbo Diesel - 270 HP @ 2400 RPM	STD
☐	99E *825 lb.-ft. torque @ 1500 RPM.*	6.7L Power Stroke V8 Turbo Diesel - 300 HP @ 2500 RPM	$1,995.00
☑	99X *850 lb.-ft. torque @ 1500 RPM.*	6.7L Power Stroke V8 Turbo Diesel - 330 HP @ 2600 RPM	$3,495.00
☑	425	50-State Emissions	N/C
☑	41H *Includes removable grille cover.*	Engine Block Heater, Phillips, 120 Volt/750 Watt	$155.00
☑	98R *Allows Driver to Inhibit Automatic Regen until Regen can be performed in a Safe location.*	Active Regen Control	$205.00
☐	916	Speed Limit - 65mph	N/C
☐	917	Speed Limit - 70mph	N/C
☐	62G For use as an Air Source when Air Brakes are not selected.	Air Compressor, Bendix, 13.2 CFM Capacity - Includes Direct Reading Air Pressure Gauge	$1,390.00

Prices and content availability as shown are subject to change and should be treated as estimates only. Actual base vehicle, package and option pricing may vary from this estimate because of special local pricing, availability or pricing adjustments not reflected in the dealer's computer system. See salesperson for the most current information.

2027 F-750 Diesel SuperCab Base (X7D)

Price Level: 715 | Quote ID: 26VL106

Available Options (cont'd)

Selected	Code	Description	MSRP
☐	94A	Engine Idle Shutdown Timer - 5 Minutes	$25.00
☐	94B	Engine Idle Shutdown Timer - 10 Minutes	$25.00
☐	94C	Engine Idle Shutdown Timer - 15 Minutes	$25.00
☐	94D	Engine Idle Shutdown Timer - 20 Minutes	$25.00
Transmissions			
☑	44D	Ford TorqShift HD 10-Speed Automatic - with PTO Provision *Includes tow/haul.*	STD
Front Wheels & Tires			
☑	643	Wheels, Front 22.5" X 8.25" White Powder Coated Steel, 10-Hole *(285.75MM BC) hub piloted, flanged nut, metric mount, 8.25 DC rims; with steel hubs.*	STD
☐	64H	Wheels, Front 22.5" X 8.25" Aluminum, 10-Hole Alcoa Bright Polished w/Dura-Bright Seal on Both Sides	$735.00
☐	649	Wheels, Front 22.5" X 8.25" Black Wheel *(285.75MM BC) hub piloted, flanged nut, metric mount, 8.25 DC rims; with steel hubs.*	$60.00
☑	T2A	Tires, Front Two 11R22.5H Goodyear Fuel Max RSA (497 Rev/Mile)	STD

Prices and content availability as shown are subject to change and should be treated as estimates only. Actual base vehicle, package and option pricing may vary from this estimate because of special local pricing, availability or pricing adjustments not reflected in the dealer's computer system. See salesperson for the most current information.

2027 F-750 Diesel SuperCab Base (X7D)

Price Level: 715 | Quote ID: 26VL106

Available Options (cont'd)

Selected	Code	Description	MSRP
☐	T2E	Tires, Front Two 11R22.5H Michelin X Multi Energy Z (501 Rev/Mile)	$240.00
☐	TCH	Tires, Front Two 255/70R22.5H Goodyear Endurance RSA (566 Rev/Mile)	$40.00
☐	T2M	Tires, Front Two 275/80R22.5H Michelin X Multi Energy Z (515 Rev/Mile)	$190.00
☐	TRA	Tires, Front Two 295/75R22.5H Continental HSR3 (514 Rev/Mile)	$130.00

Rear Wheels & Tires

☑	663	Wheels, Rear 22.5" X 8.25" White Powder Coated Steel, 10-Hole *(285.75MM BC) hub piloted, flanged nut, metric mount, 8.25 DC rims; with steel hubs.*	STD
☐	66H	Wheels, Rear 22.5" X 8.25" Aluminum, 10-Hole Alcoa Bright Polished w/Dura-Bright Seal on Both Sides *Inner wheel is white powder-coated steel.*	$830.00
☐	66C	Wheels, Rear 22.5" X 8.25" Aluminum, 10-Hole Alcoa Bright Polished w/Dura-Bright Seal on Both Sides *Inner wheel is aluminum.*	$1,470.00
☐	669	Wheels, Rear 22.5" X 8.25" Black Wheel *(285.75MM BC) hub piloted, flanged nut, metric mount, 8.25 DC rims; with steel hubs.*	$120.00
☐	60Z	Wheel, Spare 22.5" X 8.25" White Powder Coated Steel, 10-Hole - Quantity (One Only)	$145.00

Prices and content availability as shown are subject to change and should be treated as estimates only. Actual base vehicle, package and option pricing may vary from this estimate because of special local pricing, availability or pricing adjustments not reflected in the dealer's computer system. See salesperson for the most current information.

2027 F-750 Diesel SuperCab Base (X7D)

Price Level: 715 | Quote ID: 26VL106

Available Options (cont'd)

Selected	Code	Description	MSRP
☑	R2A	Tires, Rear Four 11R22.5H Goodyear Fuel Max RSA (497 Rev/Mile)	STD
☐	R2H	Tires, Rear Four 11R22.5H Goodyear Fuel Max RTD (493 Rev/Mile)	$175.00
☐	R2E	Tires, Rear Four 11R22.5H Michelin X Multi Energy Z (501 Rev/Mile)	$480.00
☐	RMB	Tires, Rear Four 11R22.5H Michelin X Multi D (494 Rev/Mile)	$405.00
☐	R2K	Tires, Rear Four 255/70R22.5H Goodyear Fuel Max RTD (563 Rev/Mile)	$140.00
☐	RCH	Tires, Rear Four 255/70R22.5H Goodyear Fuel Max RSA (563 Rev/Mile)	$80.00
☐	R2J	Tires, Rear Four 275/80R22.5H Michelin X Multi Energy D (514 Rev/Mile)	$265.00
☐	R2M	Tires, Rear Four 275/80R22.5H Michelin X Multi Energy Z (515 Rev/Mile)	$375.00
☐	RRD	Tires, Rear Four 295/75R22.5H Continental HDR2 ECO PLUS (514 Rev/Mile)	$310.00
☐	RRA	Tires, Rear Four 295/75R22.5H Continental HSR3 (514 Rev/Mile)	$260.00

Prices and content availability as shown are subject to change and should be treated as estimates only. Actual base vehicle, package and option pricing may vary from this estimate because of special local pricing, availability or pricing adjustments not reflected in the dealer's computer system. See salesperson for the most current information.

2027 F-750 Diesel SuperCab Base (X7D)

Price Level: 715 | Quote ID: 26VL106

Available Options (cont'd)

Selected	Code	Description	MSRP
Brakes			
☐	67H	Hydraulic Brake System - Bosch HydroMax w/Traction Control	STD
		Full power with automatic adjustment, 4-channel ABS antilock brake system. Includes 12" x 3" (Bosch) DSSA type rear axle mounted parking brake, Orscheln lever control, right of driver and hand operated park brake lever.	
☐	152	Trailer Connection Socket - 7-Way, Wired For Turn Signals Combined with Stop	$100.00
		Mounted at rear of frame, for combined trailer stop, tail, turn, marker light circuits. Includes electric trailer brake accommodation package with cab connections for mounting customer installed electric brake unit.	
☐	154	Trailer Connection Socket - 7-Way, Wired For Turn Signals, Separate of Stop	$100.00
		Mounted at rear of frame, for separate trailer stop, tail, turn, marker light circuits. Includes electric trailer brake accommodation package with cab connections for mounting customer installed electric brake unit.	
☑	67A	Air Brakes (4 WHEEL DRUM) - Straight Truck w/Traction Control	Variable
		Meritor Q-Plus with ABS, Bendix Anti-Lock Brake System, 4-channel. Includes 15" x 4" front brakes, dual direct reading air pressure gauges, brake lines color coded nylon, Bendix 13.2 CFM capacity air compressor, instrument panel mounted yellow knob parking brake control valve, automatic slack adjusters front and rear, two rear spring parking air brake chambers mounted on front of rear axle, three drain valves and two air tanks (Reference Body Builders Book for location). Rear brake size and components dependent upon axle selection. Uses existing ABS system to minimize wheel slipping during acceleration. Usage determined by the air brake package selected. (Not recommended with Hi-Rail Train Systems). Deletes hand operated park brake lever. *Includes:* *- Air Dryer, Bendix AD/IS w/Heater* *Mounted left frame rail (for Hydraulic brake applications that include stand alone engine air compressor).*	
☐	67D	Air Brakes (4 WHEEL DISC) w/Traction Control	$3,755.00
		Deletes hand operated park brake lever. *Includes:* *- Air Dryer, Bendix AD/IS w/Heater* *Mounted left frame rail (for Hydraulic brake applications that include stand alone engine air compressor).*	
☐	67C	Air Brakes (FRONT DISC / REAR DRUM) - Straight Truck w/Traction Control	$3,020.00
		Bendix 13.2 CFM capacity air compressor, instrument panel mounted yellow knob parking brake control valve. Deletes hand operated park brake lever. *Includes:*	

Prices and content availability as shown are subject to change and should be treated as estimates only. Actual base vehicle, package and option pricing may vary from this estimate because of special local pricing, availability or pricing adjustments not reflected in the dealer's computer system. See salesperson for the most current information.

2027 F-750 Diesel SuperCab Base (X7D)

Price Level: 715 | Quote ID: 26VL106

Available Options (cont'd)

Selected	Code	Description	MSRP
		- Air Dryer, Bendix AD/IS w/Heater Mounted left frame rail (for Hydraulic brake applications that include stand alone engine air compressor).	
☑	18A	Electronic Stability Control DELETE *Deletes the standard ESC feature.*	Variable
☐	98B	Final Upfit Center of Gravity - Low CG (38" to 48" FINAL Center of Gravity) *With MY23 having Electronic Stability Control Standard. When air brakes are selected, the "final upfit center of gravity (CG)" must be selected by dealer when ordering. If the final CG is not known, use the ESC delete (18A) feature. Where the final upfit CG is known, and the unit requires ESC for other features (such as Driver Assist Technology) select the appropriate CG value range when ordering air brake during the specing process. Call TRKLINE (877-875-5463) with any questions.*	N/C
☐	98C	Final Upfit Center of Gravity - Medium CG (48" to 58" FINAL Center of Gravity) *With MY23 having Electronic Stability Control Standard. When air brakes are selected, the "final upfit center of gravity (CG)" must be selected by dealer when ordering. If the final CG is not known, use the ESC delete (18A) feature. Where the final upfit CG is known, and the unit requires ESC for other features (such as Driver Assist Technology) select the appropriate CG value range when ordering air brake during the specing process. Call TRKLINE (877-875-5463) with any questions.*	N/C
☐	98E	Final Upfit Center of Gravity - High CG (58" to 68" FINAL Center of Gravity) *With MY23 having Electronic Stability Control Standard. When air brakes are selected, the "final upfit center of gravity (CG)" must be selected by dealer when ordering. If the final CG is not known, use the ESC delete (18A) feature. Where the final upfit CG is known, and the unit requires ESC for other features (such as Driver Assist Technology) select the appropriate CG value range when ordering air brake during the specing process. Call TRKLINE (877-875-5463) with any questions.*	N/C
☐	98F	Final Upfit Center of Gravity - Tanker High CG (58" to 68" FINAL Center of Gravity) *With MY23 having Electronic Stability Control Standard. When air brakes are selected, the "final upfit center of gravity (CG)" must be selected by dealer when ordering. If the final CG is not known, use the ESC delete (18A) feature. Where the final upfit CG is known, and the unit requires ESC for other features (such as Driver Assist Technology) select the appropriate CG value range when ordering air brake during the specing process. Call TRKLINE (877-875-5463) with any questions.*	N/C
☐	98J	Final Upfit Center of Gravity - Tanker Medium CG (48" to 58" FINAL Center of Gravity) *With MY23 having Electronic Stability Control Standard. When air brakes are selected, the "final upfit center of gravity (CG)" must be selected by dealer when ordering. If the final CG is not known, use the ESC delete (18A) feature. Where the final upfit CG is known, and the unit requires ESC for other features (such as Driver Assist Technology) select the appropriate CG value range when ordering air brake during the specing process. Call TRKLINE (877-875-5463) with any questions.*	N/C

Prices and content availability as shown are subject to change and should be treated as estimates only. Actual base vehicle, package and option pricing may vary from this estimate because of special local pricing, availability or pricing adjustments not reflected in the dealer's computer system. See salesperson for the most current information.

2027 F-750 Diesel SuperCab Base (X7D)

Price Level: 715 | Quote ID: 26VL106

Available Options (cont'd)

Selected	Code	Description	MSRP
☑	62D	Air Dryer, Bendix AD/IS w/Heater *Mounted left frame rail (for Hydraulic brake applications that include stand alone engine air compressor).*	$460.00
☐	62F	Brake Chamber Spring Relocated *Relocated to rear of rear axle for maximum ground clearance.*	$45.00
☐	158	Trailer Air Brake Package *Includes air lines to rear of frame, hand control valve and tractor protection valve.*	$365.00
☑	159	Trailer Connection Socket - 7-Way, Wired For Turn Signals Combined with Stop *Mounted at rear of frame, for combined trailer stop, tail, turn (compatible with trailers that use combined stop, tail, turn lights).*	$100.00
☐	157	Trailer Connection Socket - 7-Way, Wired For Turn Signals, Separate of Stop *Mounted at rear of frame, for separate trailer stop, tail, turn, marker light circuits (compatible with trailers that have amber or side turn lamps with separate stop/turn).*	$100.00

Front Axle and Suspension

☐	43N	10,000 Lb. Cap. Non-Driving - Dana E-1002I - I-Beam Type	STD
☑	43P	12,000 Lb. Cap. Non-Driving - Dana E-1202I - I-Beam Type	$525.00
☐	43D	14,000 Lb. Cap. Non-Driving - Dana	$1,280.00
☐	61C	Taper-Leaf Springs, Parabolic - 10,000 Lb. Cap *2-leaf, 62" x 3.15". Also includes, standard duty, dual, double acting shock absorbers.*	STD
☐	61D	Taper-Leaf Springs, Parabolic - 12,000 Lb. Cap	$305.00

Prices and content availability as shown are subject to change and should be treated as estimates only. Actual base vehicle, package and option pricing may vary from this estimate because of special local pricing, availability or pricing adjustments not reflected in the dealer's computer system. See salesperson for the most current information.

2027 F-750 Diesel SuperCab Base (X7D)

Price Level: 715 | Quote ID: 26VL106

Available Options (cont'd)

Selected	Code	Description	MSRP
		2-leaf, 62" x 3.15". Also includes, standard duty, dual, double acting shock absorbers.	
☑	61E	Taper-Leaf Springs, Parabolic - 13,200 Lb. Cap *3-leaf, 62" x 3.15". Also includes, standard duty, dual, double acting shock absorbers.*	$365.00
☐	61F	Taper-Leaf Springs, Parabolic - 14,000 Lb. Cap *3-leaf, 62" x 3.15". Also includes, standard duty, dual, double acting shock absorbers.*	$425.00
☐	15S	Front Stabilizer Bar	$490.00
☑	60A	Lube, Front Axle, EmGard 50W, Synthetic Oil	$50.00

Rear Axle and Suspension

☑	475	21,000 Lb. Single Reduction - Open - Dana / Spicer 21060S *NOTE: When specifying an axle ratio, check performance guidelines for startability and gradeability.*	STD
☐	476	21,000 Lb. Single Reduction - Locking - Dana / Spicer 21060D *NOTE: When specifying an axle ratio, check performance guidelines for startability and gradeability.*	$1,830.00
☐	479	23,000 Lb. Single Reduction - Open - Dana / Spicer S23-172 *NOTE: When specifying an axle ratio, check performance guidelines for startability and gradeability.*	$2,320.00
☐	47P	23,000 Lb. Single Reduction - Locking - Dana / Spicer S23-172D *NOTE: When specifying an axle ratio, check performance guidelines for startability and gradeability.*	$2,100.00
☐	47X	26,000 Lb. Single Reduction - Open - Dana / Spicer S26-190 *NOTE: When specifying an axle ratio, check performance guidelines for startability and gradeability.*	$2,445.00

Prices and content availability as shown are subject to change and should be treated as estimates only. Actual base vehicle, package and option pricing may vary from this estimate because of special local pricing, availability or pricing adjustments not reflected in the dealer's computer system. See salesperson for the most current information.

2027 F-750 Diesel SuperCab Base (X7D)

Price Level: 715 | Quote ID: 26VL106

Available Options (cont'd)

Selected	Code	Description	MSRP
☐	68P	Multi-Leaf Springs - 21,000 Lb. Cap *For 19,000 lb. and 21,000 lb. rear axles. Includes 4,500 lb auxiliary rubber spring.*	STD
☑	68R	Multi-Leaf Springs - 23,000 Lb. Cap *For 21,000 lb., 23,000 lb. and 26,000 lb. rear axles. Includes 4,500 lb auxiliary rubber spring.*	$230.00
☐	68T	Multi-Leaf Springs - 31,000 Lb. Cap *For 23,000 lb. and 26,000 lb. rear axles. Includes 4,500 lb auxiliary rubber spring.*	$490.00
☐	961	Shock Absorbers, Rear - Double Acting	$165.00
☑	607	Lube, Rear Axle, EmGard 75W-90, Synthetic Oil	$100.00
☑	X4G	4.88 Axle Ratio	N/C
☐	X5B	5.29 Axle Ratio	N/C
☐	X5D	5.57 Axle Ratio	N/C
☐	X6A	6.14 Axle Ratio	N/C
☐	X6B	6.17 Axle Ratio	N/C
☐	X6D	6.50 Axle Ratio	N/C
☐	X6E	6.83 Axle Ratio	N/C

Wheelbase

☐	179WB	179" Wheelbase/84" CA/49" AF/267" OAL	STD

Prices and content availability as shown are subject to change and should be treated as estimates only. Actual base vehicle, package and option pricing may vary from this estimate because of special local pricing, availability or pricing adjustments not reflected in the dealer's computer system. See salesperson for the most current information.

2027 F-750 Diesel SuperCab Base (X7D)

Price Level: 715 | Quote ID: 26VL106

Available Options (cont'd)

Selected	Code	Description	MSRP
☐	203WB	203" Wheelbase/108" CA/70" AF/312" OAL	$165.00
☑	215WB	215" Wheelbase/120" CA/75" AF/329" OAL	$320.00
☐	221WB	221" Wheelbase/126" CA/75" AF/335" OAL	$375.00
☐	239WB	239" Wheelbase/144" CA/81" AF/359" OAL	$580.00
☐	245WB	245" Wheelbase/150" CA/87" AF/371" OAL	$755.00
☐	251WB	251" Wheelbase/156" CA/87" AF/377" OAL	$770.00
☐	281WB	281" Wheelbase/186" CA/120" AF/440" OAL	$855.00

Frame

☐	535	Single Channel - Straight 'C' 15.14 SM, 80,000 PSI	STD
	1,211,200 RBM. High strength low alloy steel. 10.250" x 3.092" x 0.375" (260.4mm x 78.5mm x 9.5mm). Includes: - GVWR Limit: 37,000 lbs.		
☐	536	Single Channel - Straight 'C' 14.18 SM, 120,000 PSI	$365.00
	1,701,600 RBM. Heat treated alloy steel; 10.125" x 3.580" x 0.312" (257.2mm x 90.9mm x 8.0mm).		
☐	538	Single Channel - Straight 'C' 16.98 SM, 120,000 PSI	$650.00
	2,037,600 RBM. Heat treated alloy steel; 10.250" x 3.610" x 0.375" (260.4mm x 91.66mm x 9.5mm).		

Prices and content availability as shown are subject to change and should be treated as estimates only. Actual base vehicle, package and option pricing may vary from this estimate because of special local pricing, availability or pricing adjustments not reflected in the dealer's computer system. See salesperson for the most current information.

2027 F-750 Diesel SuperCab Base (X7D)

Price Level: 715 | Quote ID: 26VL106

Available Options (cont'd)

Selected	Code	Description	MSRP
☑	539	Single Channel - Straight 'C' 20.11 SM, 120,000 PSI *2,413,200 RBM. Heat treated alloy steel; 10.375" x 3.705" x 0.438" (263.5mm x 94.1mm x 11.1mm).*	$1,075.00
☐	41R	Outer "C" Channel Reinforcement - 120,000 PSI *29.84 SM; 3,580,800 RBM. Heat treated alloy steel; 10.813" x 3.892" x 0.312"; (274.6 mm x 98.9 mm x 8.0 mm).*	$1,160.00
☐	532	Frame Extension, Front - Integral 20" in Front of Grille *Includes:* *- Grille, Fixed - Black/Gray* *- Bumper, Front - Delete - Also Deletes Mounting Brackets*	$490.00
☐	765	Bumper, Front - Full Width, Chrome Plated Steel - (Included in (90E) Exterior Appearance Group)	$490.00
☐	76X	Bumper, Front - Delete - Also Deletes Mounting Brackets	-$135.00
☐	76F	3" Front Bumper Extension	$175.00
☐	76Y	Tow Hooks - Delete	-$70.00
☐	18D	Special Rating GVWR - Limited to 25,999 Lb. GVWR Only available to GAWR combinations that EXCEED 26,000 lbs.	$120.00
☐	18G	Special De-Rating GVWR - Limited to 33,000 Lb. GVWR Only available to GAWR combinations that EXCEED 33,000 lbs. *May eliminate the need to pay 12% Federal Excise Tax (F. E. T.).*	$120.00
☐	86C	Chrome Grille Surround	$245.00

Prices and content availability as shown are subject to change and should be treated as estimates only. Actual base vehicle, package and option pricing may vary from this estimate because of special local pricing, availability or pricing adjustments not reflected in the dealer's computer system. See salesperson for the most current information.

2027 F-750 Diesel SuperCab Base (X7D)

Price Level: 715 | Quote ID: 26VL106

Available Options (cont'd)

Selected	Code	Description	MSRP
☐	86B	Grille, Fixed - Black/Gray	$125.00

Exhaust

☑	91G	Under Cab, Right Side Outlet, Switchback-Style *Single, horizontal muffler, right side, under cab, outside of frame rail with rear discharge.*	STD
☐	91D	Under Cab, Vertical Outlet, Right Side, Switchback-Style - Intrudes 2" Into Clean CA WARNING! The selection of this Exhaust could reduce the available CA dimension. *Single, horizontal muffler, right side under cab outside of frame rail with vertical exhaust passenger side rear corner with heat shield and turnout exit.*	$1,100.00

Fuel Tanks

☑	65E	Fuel Tank - LH 65 Gallon Rectangular - Aluminum	STD
☐	65F	Fuel Tank - 115 Gallon Rectangular - Aluminum - LH 65-Gal, RH 50-Gal	$915.00

Electrical / Alternator / Battery

☐	STDALT	Extra Heavy Duty Alternator - 12-Volt, 195 Amp	STD
☑	17A	Extra Heavy Duty Alternator - 12-Volt, 240 Amps	$410.00
☐	17D	Dual Heavy Duty Alternators - 357 Amp Capacity - 200 & 157 Amp	$855.00
☐	55M	Jump Start Stud - Remote Mounted	$90.00

Prices and content availability as shown are subject to change and should be treated as estimates only. Actual base vehicle, package and option pricing may vary from this estimate because of special local pricing, availability or pricing adjustments not reflected in the dealer's computer system. See salesperson for the most current information.

2027 F-750 Diesel SuperCab Base (X7D)

Price Level: 715 | Quote ID: 26VL106

Available Options (cont'd)

Selected	Code	Description	MSRP
☐	STDBAT *12Volt, Motorcraft.*	Battery - Two 750 CCA, 1500 Total, Includes Steel Battery Box	STD
☑	63B *12Volt, Motorcraft.*	Battery - Two 900 CCA, 1800 Total, Includes Steel Battery Box	$120.00
☐	63D *12Volt, Motorcraft.*	Battery - Three 900 CCA, 2700 Total, Includes Steel Battery Box	$250.00
☐	164	Roof Marker/Clearance Lights - Clear Lenses, 5 Lights (Replaces Standard Amber Lenses)	$30.00
☑	59C *Includes sealed connectors for 2 ground circuits, with combined left/stop, combined right/stop, stop lamps, back up lamps. Also includes 2 additional pass through wires to cab.*	Body Builder Wiring - At End of Frame, Combined - (ILO Standard - Back of Cab Combined)	$135.00
☐	59D *Includes sealed connectors for 2 ground circuits, with separate left/stop, separate right/stop, back up lamps. Also includes 2 additional pass through wires to cab.*	Body Builder Wiring - At Back of Cab, Separate - (ILO Standard - Back of Cab Combined)	$70.00
☐	59E *Includes sealed connectors for 2 ground circuits, with separate left/stop, separate right/stop, back up lamps. Also includes 2 additional pass through wires to cab.*	Body Builder Wiring - At End of Frame, Separate - (ILO Standard - Back of Cab Combined)	$135.00
☑	17M	Back-Up Alarm - Electric, 102 dBA	$110.00
☑	962	Daytime Running Lamps (Not Configurable)	$25.00

Prices and content availability as shown are subject to change and should be treated as estimates only. Actual base vehicle, package and option pricing may vary from this estimate because of special local pricing, availability or pricing adjustments not reflected in the dealer's computer system. See salesperson for the most current information.

2027 F-750 Diesel SuperCab Base (X7D)

Price Level: 715 | Quote ID: 26VL106

Available Options (cont'd)

Selected	Code	Description	MSRP
☑	86M	Vehicle Integration System 1.0	$320.00
☐	55X	Tail Light Delete *Deletes stop, turn, tail and backup lights. Does not omit cable harness to end of frame.*	N/C
☑	16V	Voltmeter *Available in message center.*	$100.00
☑	61A	Embedded Modem Delete This option MUST be added to each order for the duration of the model year. *This will be a forced option on all orders and builds from start of production.*	-$75.00

Seats

☑	88A	30/0/30 Fixed Driver & Fixed Passenger w/Consolette - Vinyl	STD
☐	88B	30/0/30 Fixed Driver & Fixed Passenger w/Consolette - Cloth	$125.00
☐	881	30/70 Fixed Driver & Fixed 2-Passenger Bench - Vinyl	$350.00
☐	882	30/70 Fixed Driver & Fixed 2-Passenger Bench - Cloth	$475.00
☐	88Y	40/20/40 Fixed Driver & Fixed Passenger w/Unique 20% Fold-Down Console - Vinyl	$420.00
☐	88Z	40/20/40 Fixed Driver & Fixed Passenger w/Unique 20% Fold-Down Console - Cloth	$545.00

Prices and content availability as shown are subject to change and should be treated as estimates only. Actual base vehicle, package and option pricing may vary from this estimate because of special local pricing, availability or pricing adjustments not reflected in the dealer's computer system. See salesperson for the most current information.

2027 F-750 Diesel SuperCab Base (X7D)

Price Level: 715 | Quote ID: 26VL106

Available Options (cont'd)

Selected	Code	Description	MSRP
☑	87B	60/40 Rear Bench Seat w/Bolster and Flip-Up Cushion *Trim will match selected driver seat material.*	STD
☐	87X	Rear Bench - Delete	-$120.00

Cab Interior

☑	600A	Preferred Equipment Package 600A *Includes:* *- Bumper, Front - Black, Full Width* *- Wheel Seals, Front - Oil Lubricated, SKF ScotSeal PlusXL Seals* *- Wheel Seals, Rear - Oil Lubricated, SKF ScotSeal PlusXL Seals* *- Manual Regen Initiation - Driver Interface in Message Center* *- Engine Exhaust Brake* *- Extra Heavy Duty Alternator - 12-Volt, 195 Amp* *- Painted Grille - Plastic* *- Lights - Roof Marker/Clearance - Amber Lenses, 5 Lights* *- Tow Hooks, Front (2) - Frame-Mounted, Painted Black* *- Four Body Builder Switches - Mounted in Center Instrument Panel* *With connector access located in engine compartment. Amperages vary by switch: 10, 15, 25, 25.* *- Floor Covering - Black Vinyl* *- Intelligent Oil Life Monitor* *- Steering Column - Tilt / Telescoping* *- Steering Wheel - Black PVC w/Integral Cruise Control Switches, Includes Audio Controls* *- Body Builder Wiring - At Back of Cab, Combined* *Includes sealed connectors for 2 ground circuits, with combined left/stop, combined right/stop, park lamps, back up lamps. Also includes 2 additional pass through wires to cab.*	N/C
☐	87H	Driver Assist Technology Package. Hydraulic Brake *Includes Forward Collision Warning, Lane Departure Warning and Auto High Beam Control.*	$1,410.00
☐	87A	Driver Assist Technology Package (w/Bendix Wingman Advanced). Air Brake *Includes Forward Collision Warning, Lane Departure Warning, Adaptive Cruise Control and Auto High Beam Control.*	$3,050.00
☐	61M	Rear View Camera w/Mirror Display *Rear view mirror video with full length display included in kit. To be installed by Upfitter.*	$690.00
☑	90A	Appearance Group *Includes front-mounted overhead console with dual sunglass bins and integral front map reading lights.* *Includes:*	$910.00

Prices and content availability as shown are subject to change and should be treated as estimates only. Actual base vehicle, package and option pricing may vary from this estimate because of special local pricing, availability or pricing adjustments not reflected in the dealer's computer system. See salesperson for the most current information.

2027 F-750 Diesel SuperCab Base (X7D)

Price Level: 715 | Quote ID: 26VL106

Available Options (cont'd)

Selected	Code	Description	MSRP
		- Chrome Trimmed Air Registers w/Positive Shut-Off *- 60/40 Rear Bench Seat w/Bolster and Flip-Up Cushion* *Trim will match selected driver seat material.* *- Power Equipment Group - (Included in (90A) Appearance Group)* *Includes power front side windows, manual rear side windows, power door locks and door trim panel.* *- Remote Keyless Entry*	
☐	92J	Enhanced Cluster w/High-Level 8-Inch Display *Electronic speedometer (MPH/KPH), includes oil pressure, coolant temperature, DEF gauge, fuel gauge, tachometer, and indicator lights. Also included is enhanced 3-button Message Center with odometer, trip odometer, distance to empty for fuel, average fuel economy, hour meter and warning messages. Transmission temperature in message center.*	Variable
☑	90P	Power Equipment Group - (Included in (90A) Appearance Group) *Includes power front side windows, manual rear side windows, power door locks and door trim panel.* *Includes:* *- Remote Keyless Entry*	$580.00
☐	86H	Rapid-Heat Supplemental Cab Heater Required with Alaska, Colorado, Idaho, Iowa, Maine, Michigan, Minnesota, Montana, New Hampshire, New York, North Dakota, South Dakota, Vermont, Wisconsin, Wyoming.	$610.00
☐	96C	Pull Out Cup Holder For Two Cups - Instrument Panel Mounted	$30.00
☑	55P	110 A/C Outlet - in Lower Center Finish Panel	$130.00
☐	214	4 Speaker Option For 588 Radio	$30.00
☑	588	Radio: AM/FM Stereo w/2 Speakers, USB Input, Clock Display and Bluetooth	STD
☐	58B	Radio Delete Package *Deletes radio, speakers, antenna and antenna cable. Includes radio instrument panel cover and aux audio jack cover and speaker locations for future radio upfit if owner desires.*	-$60.00

Prices and content availability as shown are subject to change and should be treated as estimates only. Actual base vehicle, package and option pricing may vary from this estimate because of special local pricing, availability or pricing adjustments not reflected in the dealer's computer system. See salesperson for the most current information.

2027 F-750 Diesel SuperCab Base (X7D)

Price Level: 715 | Quote ID: 26VL106

Available Options (cont'd)

Selected	Code	Description	MSRP
☐	85B	Keyed Alike - Not Available with Anti-Theft System, Requires Multiple-Unit Order	$45.00
☐	85L	Keyed Alike - Option 1 - Not Available with Anti-Theft System, Requires Multiple-Unit Order	$45.00
☐	85M	Keyed Alike - Option 2 - Not Available with Anti-Theft System, Requires Multiple-Unit Order	$45.00
☐	85N	Keyed Alike - Option 3 - Not Available with Anti-Theft System, Requires Multiple-Unit Order	$45.00
☐	85P	Keyed Alike - Option 4 - Not Available with Anti-Theft System, Requires Multiple-Unit Order	$45.00
☐	90M	Interior Rear View Mirror	$75.00

Cab Exterior

☐	90E	Exterior Appearance Group	$730.00
	Includes: *- Bumper, Front - Full Width, Chrome Plated Steel - (Included in (90E) Exterior Appearance Group)* *- Chromed Fender Badge* *- Chrome Grille Surround*		
☐	94T	Tamper-Proof Odometer	$30.00
☑	59A	Horn, Air - Black, Single Trumpet	$90.00
	Air solenoid operated, chassis mounted on rail back of bumper.		

Prices and content availability as shown are subject to change and should be treated as estimates only. Actual base vehicle, package and option pricing may vary from this estimate because of special local pricing, availability or pricing adjustments not reflected in the dealer's computer system. See salesperson for the most current information.

2027 F-750 Diesel SuperCab Base (X7D)

Price Level: 715 | Quote ID: 26VL106

Available Options (cont'd)

Selected	Code	Description	MSRP
☐	54M	Mirrors, Dual - Heated Rectangular, XL2020 - 96" Width *Integral mirror, sail type, manual fold, solid black finish.*	STD
☐	54P	Mirrors, Dual - Heated & Motorized Rectangular, XL2020 - 96" Width *Integral spot mirror, sail type, solid black finish.*	$185.00
☐	54A	Mirrors, Dual - Heated & Motorized Rectangular, XL2020 - 96" Width w/Chrome Cap *Integral spot mirror, sail type.*	$245.00
☐	54C	Mirrors, Dual - Heated Rectangular, XL2020 - 102" Width *Integral spot mirror, sail type, manual fold, solid black finish.*	$30.00
☑	54R	Mirrors, Dual - Heated & Motorized Rectangular, XL2020 - 102" Width *Integral spot mirror, sail type, solid black finish.*	$215.00
☐	54K	Mirrors, Dual - Heated & Motorized Rectangular, XL2020 - 102" Width w/Chrome Cap *Integral spot mirror, sail type.*	$275.00
☐	54F	Mirrors, Trailer Tow, Powered - Sail Mount - w/Power Telescoping & Power Folding *Includes power heated glass, heated convex spotter and integrated clearance lights/turn signals. Heat controls dash mounted.*	$365.00
☐	63F	Aux Spot Mirrors - Front Fender Mounted - (2) Driver Side and Passenger Side	$300.00
☐	63G	Aux Spot Mirror - Front Fender Mounted - (1) Passenger Side Only	$190.00

Prices and content availability as shown are subject to change and should be treated as estimates only. Actual base vehicle, package and option pricing may vary from this estimate because of special local pricing, availability or pricing adjustments not reflected in the dealer's computer system. See salesperson for the most current information.

2027 F-750 Diesel SuperCab Base (X7D)

Price Level: 715 | Quote ID: 26VL106

Available Options (cont'd)

Selected	Code	Description	MSRP
☐	165	Mud Flap Holder Without Flaps	$155.00
☐	166	Mud Flap Holder with Flaps	$215.00

Ship-Thru

☐	21A	Pre-Delivery Inspection	N/C
	Selection requires that you also choose either (314) or (31F) or (31T) or (31S) or (31Y) to have the Inspection performed. Required with any final Ship-To that is not a dealer.		
☐	31T	Ship-Thru: Bobs Services LLC	$0.00
	MAY be selected w/o adding (21A). For MODIFICATIONS ONLY, Dealer must make arrangements directly with Manning (please use CVT Resources for add. Info).		
☐	314	Ship-Thru - Manning	$0.00
	MAY be selected w/o adding (21A). For MODIFICATIONS ONLY, Dealer must make arrangements directly with Manning (please use CVT Resources for add. Info).		
☐	31F	Ship-Thru - NFS National Fleet Services	$0.00
	MAY be selected w/o adding (21A). For MODIFICATIONS ONLY, Dealer must make arrangements directly with NFS (please use CVT Resources for add. Info).		
☐	31S	Ship-Thru: Roush CleanTech	$0.00
	MAY be selected w/o adding (21A). For MODIFICATIONS ONLY, Dealer must make arrangements directly with Roush (please use CVT Resources for add. Info).		
☐	31Y	Ship-Thru: Zoresco Equipment	$0.00
	MAY be selected w/o adding (21A). For MODIFICATIONS ONLY, Dealer must make arrangements directly with Zoresco (please use CVT Resources for add. Info).		

Miscellaneous

Prices and content availability as shown are subject to change and should be treated as estimates only. Actual base vehicle, package and option pricing may vary from this estimate because of special local pricing, availability or pricing adjustments not reflected in the dealer's computer system. See salesperson for the most current information.

2027 F-750 Diesel SuperCab Base (X7D)

Price Level: 715 | Quote ID: 26VL106

Available Options (cont'd)

Selected	Code	Description	MSRP
☑	PAINT	Paint Type - Environmentally Friendly, "3 - Wet System"	STD
☐	79V	COV Required	N/C

Send a paper Certificate of Origin for a Vehicle (COV) for those states that file electronically - CA or MI.

Fleet Options

☐ 19A — Ambulance Prep Pkg w/Special Emissions — $1,285.00

REQUIRES valid FIN code.

Includes EPA Special Emergency Vehicle Emissions. Incomplete vehicle package - requires further manufacture and certification by a final stage manufacturer. Ford vehicles are suitable for producing ambulances with special emissions only if equipped with the Ford Ambulance Prep Package with EPA Special Emergency Vehicle Emissions. In addition, Ford urges ambulance manufacturers to follow the recommendations of the Ford Incomplete Vehicle Manual and the Ford Truck Body Builders Layout Book (and pertinent supplements). Using a Ford vehicle without the Ford Ambulance Package with EPA Special Emergency Vehicle Emissions to produce an ambulance with special emissions voids the Ford warranty. NOTE 1: Stationary Elevated Idle Control (SEIC) has been integrated into the engine control module. NOTE 2: Engine calibration significantly reduces the possibility of depower mode when in stationary PTO operation. NOTE 3: Allows operator commanded regen down to 30% of DPF filter full, instead of 100%. NOTE 4: Must meet the definition of an Emergency Vehicle, an Ambulance or Fire Truck per 40 CFR 86.1803.01 in the Federal Register. NOTE 5: California Code of Regulations allows for the sale of Federally certified emergency vehicles in California.

Includes:

- Dual Heavy Duty Alternators - 357 Amp Capacity - 200 & 157 Amp

- Battery - Three 900 CCA, 2700 Total, Includes Steel Battery Box 12Volt, Motorcraft.

☐ 19F — Fire/Rescue Prep Pkg w/EPA Special Emissions — $1,285.00

REQUIRES valid FIN code.

Includes EPA Special Emergency Vehicle Emissions. Incomplete vehicle package - requires further manufacture and certification by a final stage manufacturer. Ford urges Fire/Rescue Vehicle manufacturers to follow the recommendations of the Ford Incomplete Vehicle Manual and the Ford Truck Body Builders Layout Book (and pertinent supplements). NOTE 1: Stationary Elevated Idle Control (SEIC) has been integrated into the engine control module. NOTE 2: Engine calibration significantly reduces the possibility of depower mode when in stationary PTO operation. NOTE 3: Operator commanded regen down to 30% of DPF filter full, instead of 100%. NOTE 4: Must meet the definition of an Emergency Vehicle, an Ambulance or Fire Truck per 40 CFR 86.1803.01 in the Federal Register. NOTE 5: California Code of Regulations allows for the sale of Federally certified emergency vehicles in California.

Includes:

- Dual Heavy Duty Alternators - 357 Amp Capacity - 200 & 157 Amp

- Battery - Three 900 CCA, 2700 Total, Includes Steel Battery Box 12Volt, Motorcraft.

☐ 19B — Beverage Delivery Package — $60.00

Includes body builder wiring at back of cab at frame, sealed connectors for 2 ground circuits, with combined left/stop, combined right/stop, stop lamps, park lamps, back up lamps, also includes 2 additional pass through wires to cab with 6 feet additional length to accommodate drop frame beverage body application.

Prices and content availability as shown are subject to change and should be treated as estimates only. Actual base vehicle, package and option pricing may vary from this estimate because of special local pricing, availability or pricing adjustments not reflected in the dealer's computer system. See salesperson for the most current information.

2027 F-750 Diesel SuperCab Base (X7D)

Price Level: 715 | Quote ID: 26VL106

Available Options (cont'd)

Selected	Code	Description	MSRP
☐	B4A	Net Invoice Fleet Option	$0.00
☐	56A	CPA Fleet Incentive	N/C
☐	56B	Commercial Repurchase	N/C
☐	56F	FRCS Long Term	N/C
☐	56K	Long Term Fleet Incentive	$0.00
☐	56M	National Fleet Incentive	N/C
☐	56Y	DDR Program	N/C
☐	FLADCR	Fleet Special Adjustment Credit	$0.00
☐	55D	Driver Assistance - FLEET SETTINGS	$35.00

Requires Valid Code.

Note: Settings are locked and cannot be changed by driver or fleet administrator. Includes driver alert set to ON, collision assist - alert sensitivity set to NORMAL, distance indication is set to ON, active braking set to ON, pre collision warning set to ON, lane keeping set to ON, sensitivity set to NORMAL, auto lamp delay set to 20 sec, auto high beam set to ON and daytime lights set to ON.

☐	87S	Fleet Safety Kit	$205.00

Includes 5 lb fire extinguisher class A, B and C with mounting brackets, triangle reflector and vehicle fuse kit (shipped loose not installed at plant).

VSO Options

☐	SP101	VSO - Monotone Special Paint (Minimum Quantity 5)	$1,340.00
☐	SPF	VSO - Special Paint Formulation (Minimum Quantity 5)	$1,340.00

Prices and content availability as shown are subject to change and should be treated as estimates only. Actual base vehicle, package and option pricing may vary from this estimate because of special local pricing, availability or pricing adjustments not reflected in the dealer's computer system. See salesperson for the most current information.

2027 F-750 Diesel SuperCab Base (X7D)

Price Level: 715 | Quote ID: 26VL106

Available Options (cont'd)

Selected	Code	Description	MSRP
☐	YFV	VSO SPO Code	N/C
☐	YGN	VSO - FRT ORG SEAT BELTS 027 *Front outboard orange seat belts only, center remains black on the super cab only.*	$116.00

Prices and content availability as shown are subject to change and should be treated as estimates only. Actual base vehicle, package and option pricing may vary from this estimate because of special local pricing, availability or pricing adjustments not reflected in the dealer's computer system. See salesperson for the most current information.

2027 F-750 Diesel SuperCab Base (X7D)

Price Level: 715 | Quote ID: 26VL106

Selected Equip & Specs

Dimensions

- GCWR: 50,000 lbs.
- * **Rear brake diameter: 16.5"**
- * **Vehicle body length: 329.0"**
- * **Vehicle body height: 95.1"**
- * **Turning radius (to curb): 28.4'**
- * **Rear track: 72.7"**
- Rear tire outside width: 96.0"
- * **Frame section modulus: 20.1 cu.in.**
- * **Frame rail depth: 10.4"**
- Frame rail thickness: .4"
- Front bumper to front axle: 39.0"
- Headroom second-row: 38.1"
- Leg room second-row: 31.6"
- Shoulder room second-row: 68.1"
- Hip room second-row: 67.3"
- Front brake diameter: 15.0"
- Driver distance from axle: 54.4"
- Vehicle body width: 96.7"
- * **Wheelbase: 215.0"**
- * **Front track: 83.5"**
- * **Cab to axle: 120.0"**
- * **Axle to end of frame: 75.0"**
- * **Frame yield strength (psi): 120000.0**
- * **Frame rail width: 3.7"**
- Frame rail section: 9.5"
- Headroom first-row: 40.7"
- Leg room first-row: 41.4"
- Shoulder room first-row: 68.0"
- Hip room first-row: 67.6"

Powertrain

- Compression ignition system
- Engine cylinders: V-8
- * **Torque: 850 lb.-ft.@1500 RPM**
- Radiator
- Auxiliary power take-off
- RNDM shift indicator
- 10-speed automatic
- Recommended fuel: diesel
- Standard rear differential
- * **6.7L V-8 diesel direct injection, intercooled turbo, diesel, engine with 330HP**
- * **Horsepower: 330 HP@2600 RPM**
- * **Engine block heater**
- Engine retarder system
- Fuel/water separator
- 75 mph speed limiter
- Rear-wheel drive
- Low-speed ABS traction control

Fuel Economy and Emissions

- Federal emissions

Suspension and Handling

- Standard ride suspension
- Gas-pressurized front shock absorbers

Driveability

- * **Air brake system**
- Four channel ABS brakes
- Leaf spring front suspension
- 4-wheel antilock (ABS) brakes
- Rigid axle front suspension
- Tapered leaf front suspension

Prices and content availability as shown are subject to change and should be treated as estimates only. Actual base vehicle, package and option pricing may vary from this estimate because of special local pricing, availability or pricing adjustments not reflected in the dealer's computer system. See salesperson for the most current information.

2027 F-750 Diesel SuperCab Base (X7D)

Price Level: 715 | Quote ID: 26VL106

Selected Equip & Specs (cont'd)

- Rigid axle rear suspension
- Hydraulic power-assist steering system
- 2-wheel steering system
- Leaf spring rear suspension
- Re-circulating ball steering

Body Exterior

- * **Trailer wiring harness**
- 4 doors
- Black side window trim
- Black windshield trim
- 2 front tow hooks
- Black grille
- Convex spotter in driver and passenger side door mirrors
- Black door mirrors
- Reverse opening right rear passenger door
- 22.5 x 8.25-inch front and dual rear wheels
- Steel front wheels
- Steel rear wheels
- Side assist steps
- Monotone paint
- Black door handles
- Black front bumper
- Straight front bumper ends
- Hood mounted grille
- Trailer style side mirrors
- Reverse opening left rear passenger door
- English measure truck 279/82R22.5 AS BSW front and rear tires
- White front wheels
- White rear wheels
- Disc rear wheel

Convenience

- * **Power door locks with 2 stage unlocking**
- * **Auto-locking doors**
- * **Power first-row windows**
- Driver foot rest
- Front beverage holders
- 2 beverage holders
- Dashboard storage
- Upfitter switches
- Steering column lever gearshift location
- * **Keyfob activated door locks**
- Cruise control with steering wheel mounted controls
- Partial floor console
- Fixed rear windshield
- Standard glove box
- * **Driver and passenger door bins**
- Trip computer
- * **Single air horn**

Comfort

- Manual climate control
- Full headliner coverage
- Full floor coverage
- Carpet rear seatback upholstery
- Manual tilting steering wheel
- Cloth headliner material
- Full vinyl floor covering
- Vinyl rear seat upholstery
- Urethane steering wheel
- Manual telescopic steering wheel

Seats and Trim

- Seating capacity: 5
- Front passenger seat armrest
- Driver seat armrest
- Bucket driver seat

Prices and content availability as shown are subject to change and should be treated as estimates only. Actual base vehicle, package and option pricing may vary from this estimate because of special local pricing, availability or pricing adjustments not reflected in the dealer's computer system. See salesperson for the most current information.

2027 F-750 Diesel SuperCab Base (X7D)

Price Level: 715 | Quote ID: 26VL106

Selected Equip & Specs (cont'd)

- Folding driver seat back
- 4 driver seats way-direction
- Bucket passenger seat
- Low passenger seat back
- Manual fore/aft
- Split-bench rear seat
- Low driver seat back
- Manual fore/aft
- Fixed passenger seat back
- 2 passenger seats way-direction
- Fixed rear seats
- Vinyl front seat upholstery

Entertainment Features

- AM/FM
- AM radio
- Seek scan
- External memory control
- Speakers number: 2
- Wireless audio streaming
- In-vehicle audio
- FM radio
- Auxiliary input jack
- Standard grade speakers
- Steering wheel mounted audio controls
- Fixed audio antenna

Lighting, Visibility and Instrumentation

- Analog instrumentation display
- Digital clock
- Tachometer
- Engine/electric motor temperature gauge
- Oil temperature gauge
- Engine hour meter
- * **Primary air pressure gauge**
- Reflector headlights
- Auto on/off headlight control
- Delay-off headlights
- Speed sensitive wipers
- * **Front reading lights**
- Daytime running lights
- Delay interior courtesy lights
- Trip odometer
- Driver information center
- Oil pressure gauge
- * **Voltmeter**
- Transmission fluid temperature gauge
- Diesel exhaust fluid (def) gauge
- Light tinted windows
- Halogen headlights
- Multiple enclosed headlights
- Variable intermittent front windshield wipers
- * **Illuminated entry**
- Variable instrument panel light
- Cab clearance lights

Technology and Telematics

- Handsfree wireless device connectivity
- 1 USB port

Safety and Security

- Front height adjustable seatbelts
- * **Remote panic alarm**
- Vehicle tracker
- * **Back-up alarm**

Dimensions

General Weights

Prices and content availability as shown are subject to change and should be treated as estimates only. Actual base vehicle, package and option pricing may vary from this estimate because of special local pricing, availability or pricing adjustments not reflected in the dealer's computer system. See salesperson for the most current information.

2027 F-750 Diesel SuperCab Base (X7D)

Price Level: 715 | Quote ID: 26VL106

Selected Equip & Specs (cont'd)

* **Curb weight**	**11,504 lbs.**	* **Rear curb weight**	**4,279 lbs.**
Front GAWR	12000 lbs.	Rear GAWR	21000 lbs.
GVWR	33000 lbs.	GCWR	50000 lbs.

Trailering Weights

GCWR	50,000 lbs.

Weights

Maximum GVWR	37,000 lbs.	* **Max RBM (in.-lbs.)**	**2,526,000 max RBM (in.-lbs.)**
* **Nominal RBM (in.-lbs.)**	**2,413,200 nominal RBM (in.-lbs.)**		

Front Weights

* **Front curb weight**	**7,225 lbs.**	* **Axle capacity front**	**12,000 lbs.**
* **Spring rating front**	**13,200 lbs.**	Tire/wheel capacity front	13,220 lbs.

Rear Weights

Axle capacity rear	21,000 lbs.	* **Spring rating rear**	**23,000 lbs.**
Tire/wheel capacity rear	24,040 lbs.		

Exterior Measurements

* **Vehicle body length**	**329.0"**	Vehicle body width	96.7"
* **Vehicle body height**	**95.1"**	* **Wheelbase**	**215.0"**
Front brake diameter	15.0"	* **Front frame height loaded**	**35.3"**
* **Rear brake diameter**	**16.5"**	* **Front frame height unloaded**	**37.3"**
* **Rear frame height loaded**	**36.8"**	* **Rear frame height unloaded**	**38.2"**
* **Turning radius (to bumper)**	**30.1'**	Width - mirrors folded	90.7"
Width - mirrors extended	121.9"	* **Front track**	**83.5"**
* **Rear track**	**72.7"**	Driver distance from axle	54.4"
* **Turning radius (to curb)**	**28.4'**	* **Cab to axle**	**120.0"**
Rear tire outside width	96.0"	* **Axle to end of frame**	**75.0"**
* **Frame section modulus**	**20.1 cu.in.**	* **Frame yield strength (psi)**	**120000.0**
* **Frame rail depth**	**10.4"**	* **Frame rail width**	**3.7"**
Frame rail thickness	.4"	Frame rail section	9.5"
Front bumper to front axle	39.0"		

Headroom

Headroom first-row	40.7"	Headroom second-row	38.1"

Legroom

Leg room first-row	41.4"	Leg room second-row	31.6"

Prices and content availability as shown are subject to change and should be treated as estimates only. Actual base vehicle, package and option pricing may vary from this estimate because of special local pricing, availability or pricing adjustments not reflected in the dealer's computer system. See salesperson for the most current information.

2027 F-750 Diesel SuperCab Base (X7D)

Price Level: 715 | Quote ID: 26VL106

Selected Equip & Specs (cont'd)

Shoulder Room

Shoulder room first-row	68.0"	Shoulder room second-row	68.1"

Hip Room

Hip room first-row	67.6"	Hip room second-row	67.3"

Powertrain

Engine

* **Engine**	**6.7L V-8 diesel direct injection, intercooled turbo, diesel, engine with 330HP**	Valves per cylinder	4
Engine cylinders	V-8	Engine location	Front mounted engine
Ignition	Compression ignition system	Engine mounting direction	Longitudinal mounted engine
Engine block material	Iron engine block	Cylinder head material	Aluminum cylinder head

Engine Specs

Displacement	6.7L	cc	405.9 cu.in.
Bore	3.9"	Stroke	4.25"
Compression ratio	16.2	* **Governed RPM**	**3400 RPM**
* **Compressor capacity**	**13.20 cu.ft. cfm**	* **Air dryer**	**Air dryer**
* **Air system moisture ejector type**	**Manual air system moisture ejector**		

Engine Power

* **Horsepower**	**330 HP@2600 RPM**	* **Torque**	**850 lb.-ft.@1500 RPM**

Alternator

* **Alternator amps**	**240A**	Alternator type	Heavy-duty alternator

Battery

Battery type	Dual lead acid battery	* **Battery rating**	**1800CCA**
Battery step	Battery step	Battery location	Battery location forward right
Battery run down protection	Battery run down protection		

Engine Extras

* **Block heater**	**Engine block heater**	Radiator	Radiator
Fuel/water separator	Fuel/water separator	Auxiliary power take-off	Auxiliary power take-off
Engine retarder	Engine retarder system	Shift indicator	RNDM shift indicator

Transmission

Transmission	10-speed automatic	Transmission electronic control	Transmission electronic control

Prices and content availability as shown are subject to change and should be treated as estimates only. Actual base vehicle, package and option pricing may vary from this estimate because of special local pricing, availability or pricing adjustments not reflected in the dealer's computer system. See salesperson for the most current information.

2027 F-750 Diesel SuperCab Base (X7D)

Price Level: 715 | Quote ID: 26VL106

Selected Equip & Specs (cont'd)

Speed limiter	75 mph speed limiter
Lock-up transmission	Lock-up transmission
Second gear ratio	2.919
Fourth gear ratio	1.773
Sixth gear ratio	1.277
Seventh gear ratio	1
Ninth gear ratio	0.687
Stall ratio	1.97
Sequential shift control	Sequential shift control
PTO transmission provision	PTO transmission provision
Overdrive transmission	Overdrive transmission
First gear ratio	4.615
Third gear ratio	2.132
Fifth gear ratio	1.519
Reverse gear ratio	4.695
Eighth gear ratio	0.851
Tenth gear ratio	0.632
Selectable mode transmission	Selectable mode transmission
Transmission oil cooler	Transmission oil cooler

Drive Type

Drive type	Rear-wheel drive

Drivetrain

* **Axle ratio**	**4.88**
Axle speed	Single axle speed

Exhaust

Tailpipe	Aluminized steel single exhaust
Additional muffler location	right
Additional tailpipe location	right
Additional muffler type	horizontal
Additional tailpipe type	horizontal

Fuel

Fuel type	diesel

Fuel Tank

Front left fuel tank shape	rectangular
DEF capacity	8.00 gal.
Front left fuel tank capacity	65.01 US gallons

Drive Feature

Traction control	Low-speed ABS traction control
Differential	Standard rear differential

Fuel Economy and Emissions

Emissions

Emissions	Federal emissions

Suspension and Handling

Suspension

Suspension	Standard ride suspension
Front shock absorbers	Gas-pressurized front shock absorbers

Driveability

Prices and content availability as shown are subject to change and should be treated as estimates only. Actual base vehicle, package and option pricing may vary from this estimate because of special local pricing, availability or pricing adjustments not reflected in the dealer's computer system. See salesperson for the most current information.

2027 F-750 Diesel SuperCab Base (X7D)

Price Level: 715 | Quote ID: 26VL106

Selected Equip & Specs (cont'd)

Brakes

* **Brake type**	**Air brake system**
ABS brakes	4-wheel antilock (ABS) brakes
ABS brakes	Four channel ABS brakes

Front Suspension

Suspension ride type front	Rigid axle front suspension
Suspension type front	Leaf spring front suspension

Front Spring

Regular front springs	Regular front springs
Springs front	Tapered leaf front suspension

Rear Spring

Springs rear	Multi-leaf rear suspension
Rear springs	Regular grade rear springs
Auxiliary rear spring	Rubber auxiliary rear spring

Rear Suspension

Suspension type rear	Leaf spring rear suspension
Suspension ride type rear	Rigid axle rear suspension

Steering

Steering	Hydraulic power-assist steering system
Steering type	Re-circulating ball steering
Steering type number of wheels	2-wheel steering system

Exterior

Front Wheels

Front wheels diameter	22.5"
Front wheels width	8.3"

Rear Wheels

Rear wheels diameter	22.5"
Rear wheels width	8.3"

Front And Rear Wheels

Appearance	none

Front Tires

Aspect	82
Diameter	22.5"
Sidewalls	BSW
Tread	AS
Type	english measure truck tire
Width	279mm
Front wheel - RPM	497

Rear Tires

Aspect	82
Diameter	22.5"
Sidewalls	BSW
Tread	AS
Type	english measure truck tire
Width	279mm
Rear wheel - RPM	497

Body Exterior

Prices and content availability as shown are subject to change and should be treated as estimates only. Actual base vehicle, package and option pricing may vary from this estimate because of special local pricing, availability or pricing adjustments not reflected in the dealer's computer system. See salesperson for the most current information.

2027 F-750 Diesel SuperCab Base (X7D)

Price Level: 715 | Quote ID: 26VL106

Selected Equip & Specs (cont'd)

Trailering

- **Towing wiring harness** ..... **Trailer wiring harness**

Exterior Features

Number of doors ..... 4 doors
Front splash guards ..... Front splash guards
Side steps ..... Side assist steps

Frame

Clean CA frame ..... Clean CA frame

Body

Body panels ..... Composite and galvanized steel body panels

Mirrors

Convex spotter ..... Convex spotter in driver and passenger side door mirrors

Tires

Front tires LT load rating ..... H
Rear tires LT load rating ..... H

Wheels

Front wheel type ..... Disc front wheel
Number of front wheel studs ..... 10 front wheel studs
Dual rear wheels ..... Dual rear wheels
Number of rear wheel studs ..... 10 rear wheel studs

Convenience

Door Locks

- **Door locks** ..... **Power door locks with 2 stage unlocking**
- **Auto door locks** ..... **Auto-locking doors**
- **Keyfob door locks** ..... **Keyfob activated door locks**

Cruise Control

Cruise control ..... Cruise control with steering wheel mounted controls

Exterior Mirrors

- **Door mirrors** ..... **Power door mirrors**

Heated door mirrors ..... Heated driver and passenger side door mirrors
Folding door mirrors ..... Manual folding door mirrors

Front Side Windows

- **First-row windows** ..... **Power first-row windows**

Floor Console

Floor console ..... Partial floor console

Prices and content availability as shown are subject to change and should be treated as estimates only. Actual base vehicle, package and option pricing may vary from this estimate because of special local pricing, availability or pricing adjustments not reflected in the dealer's computer system. See salesperson for the most current information.

2027 F-750 Diesel SuperCab Base (X7D)

Price Level: 715 | Quote ID: 26VL106

Selected Equip & Specs (cont'd)

Overhead Console

* **Overhead console**	**Mini overhead console**	* **Overhead console storage**	**Overhead console storage**

Passenger Visor

Visor passenger mirror	Passenger visor mirror		

Power Outlets

12V power outlets	2 12V power outlets	* **120V AC power outlets**	**1 120V AC power outlet**

Pedals

Driver foot rest	Driver foot rest		

Rear Windshield

Rear windshield	Fixed rear windshield		

Storage

* **Door bins front**	**Driver and passenger door bins**	Number of beverage holders	2 beverage holders
Beverage holders	Front beverage holders	Glove box	Standard glove box
Dashboard storage	Dashboard storage		

Windows Feature

* **One-touch up window**	**Driver and passenger one-touch up windows**	* **One-touch down window**	**Driver and passenger one-touch down windows**

Windows Rear Side

Second-row windows	Fixed second-row windows		

Miscellaneous

Trip computer	Trip computer	Gearshift location	Steering column lever gearshift location
Upfitter switches	Upfitter switches	* **Horn**	**Single air horn**

Comfort

Climate Control

Climate control	Manual climate control		

Headliner

Headliner material	Cloth headliner material	Headliner coverage	Full headliner coverage

Floor Trim

Floor covering	Full vinyl floor covering	Floor coverage	Full floor coverage

Second-Row Seat Trim

Rear seat upholstery	Vinyl rear seat upholstery	Rear seatback upholstery	Carpet rear seatback upholstery

Prices and content availability as shown are subject to change and should be treated as estimates only. Actual base vehicle, package and option pricing may vary from this estimate because of special local pricing, availability or pricing adjustments not reflected in the dealer's computer system. See salesperson for the most current information.

2027 F-750 Diesel SuperCab Base (X7D)

Price Level: 715 | Quote ID: 26VL106

Selected Equip & Specs (cont'd)

Steering Wheel

Steering wheel material ..... Urethane steering wheel
Steering wheel telescopic . Manual telescopic steering wheel
Steering wheel tilt ..... Manual tilting steering wheel

Seats and Trim

Seat Capacity

Seating capacity 5

Front Seats

Front seat type ..... Bucket driver seat
Front seat type ..... Bucket passenger seat
Driver seat back ..... Folding driver seat back
Driver seat back type ..... Low driver seat back
Driver seats way-direction 4 driver seats way-direction
Driver seat fore/aft ..... Manual fore/aft
Passenger seat back ..... Fixed passenger seat back
Passenger seat back type .. Low passenger seat back
Passenger seats way-direction .... 2 passenger seats way-direction
Passenger seat fore/aft ..... Manual fore/aft
Armrests front driver ..... Driver seat armrest
Armrests front passenger ..... Front passenger seat armrest

Rear Seats

Bench seats ..... Split-bench rear seat
Rear seats fixed or removable ..... Fixed rear seats
Folding second-row seats .... 60-40 folding rear seats
Rear seat direction ..... Front facing rear seat
Rear seat folding position ... Fold-up rear seat cushion

Front Seat Trim

Front seat upholstery ..... Vinyl front seat upholstery
Front seatback upholstery ..... Carpet front seatback upholstery

Interior Accents

* **Interior accents ..... Chrome interior accents**

Gearshifter Material

Gearshifter material .... Urethane gear shifter material

Entertainment Features

Radio Features

Aux input jack ..... Auxiliary input jack
External memory ..... External memory control
Seek scan ..... Seek scan

Speakers

Speakers ..... Standard grade speakers
Speakers number 2

Audio Features

Prices and content availability as shown are subject to change and should be treated as estimates only. Actual base vehicle, package and option pricing may vary from this estimate because of special local pricing, availability or pricing adjustments not reflected in the dealer's computer system. See salesperson for the most current information.

2027 F-750 Diesel SuperCab Base (X7D)

Price Level: 715 | Quote ID: 26VL106

Selected Equip & Specs (cont'd)

Steering mounted audio control ..... Steering wheel mounted audio controls
Wireless streaming ..... Wireless audio streaming

Lighting, Visibility and Instrumentation

Instrumentation

Trip odometer ..... Trip odometer
Instrumentation display ..... Analog instrumentation display

Instrumentation Displays

Driver information center .... Driver information center
Clock ..... Digital clock

Instrumentation Gauges

Tachometer ..... Tachometer
* **Primary air pressure gauge .. Primary air pressure gauge**
Oil pressure gauge ..... Oil pressure gauge
Oil temperature gauge ..... Oil temperature gauge
Transmission temperature gauge .. Transmission fluid temperature gauge
* **Voltmeter ..... Voltmeter**
Engine/electric motor temperature gauge ..... Engine/electric motor temperature gauge
Engine hour meter ..... Engine hour meter
DEF fluid gauge ..... Diesel exhaust fluid (def) gauge

Instrumentation Warnings

Oil pressure warning ..... Oil pressure warning
Low fuel warning ..... Low fuel warning
Low brake fluid warning ..... Low brake fluid warning
Battery charge warning ..... Battery charge warning
Headlights on reminder ..... Headlights on reminder
Key in vehicle warning ..... Key in vehicle warning
Door ajar warning ..... Door ajar warning
Service interval warning .... Service interval indicator
Transmission fluid temperature warning Transmission fluid temp warning
Low diesel exhaust fluid (DEF) warning .... Low diesel exhaust fluid (DEF) warning

Glass

Tinted windows ..... Light tinted windows

Headlights

Headlights ..... Halogen headlights
Headlight type ..... Reflector headlights
Auto headlights ..... Auto on/off headlight control
Multiple headlights ..... Multiple enclosed headlights
Delay off headlights ..... Delay-off headlights

Front Windshield

Wipers ... Variable intermittent front windshield wipers
Speed sensitive wipers ..... Speed sensitive wipers

Interior Lighting

* **Illuminated entry ..... Illuminated entry**
Variable panel light .... Variable instrument panel light
* **Front reading lights ..... Front reading lights**

Lights

Prices and content availability as shown are subject to change and should be treated as estimates only. Actual base vehicle, package and option pricing may vary from this estimate because of special local pricing, availability or pricing adjustments not reflected in the dealer's computer system. See salesperson for the most current information.

2027 F-750 Diesel SuperCab Base (X7D)

Price Level: 715 | Quote ID: 26VL106

Selected Equip & Specs (cont'd)

Running lights ..... Daytime running lights
Clearance lights ..... Cab clearance lights
Interior courtesy lights ... Delay interior courtesy lights

Technology and Telematics

Connectivity

Handsfree .... Handsfree wireless device connectivity

USB Ports

USB ports ..... 1 USB port

Safety and Security

Seatbelts

Height adjustable seatbelts .... Front height adjustable seatbelts

Security System

* **Remote panic alarm ..... Remote panic alarm**
Vehicle tracker ..... Vehicle tracker

Parking Sensors

* **Back up alarm ..... Back-up alarm**

Prices and content availability as shown are subject to change and should be treated as estimates only. Actual base vehicle, package and option pricing may vary from this estimate because of special local pricing, availability or pricing adjustments not reflected in the dealer's computer system. See salesperson for the most current information.

2027 F-750 Diesel SuperCab Base (X7D)

Price Level: 715 | Quote ID: 26VL106

Vehicle Dimension and Performance Summary

Performance predictions in this report represent an estimate of vehicle performance based on standard operating conditions. Variations in customer equipment, load configuration, ambient conditions, and/or operator driving techniques can cause significant variations in vehicle performance. These values are not representative of results that may be shown in actual dynamometer tests. This report should therefore be used as a guide for comparative vehicle performance.

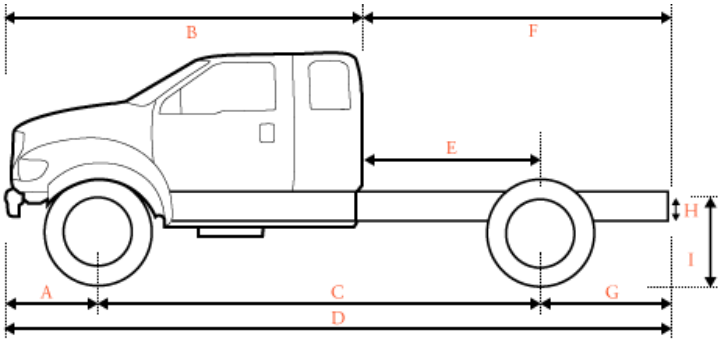

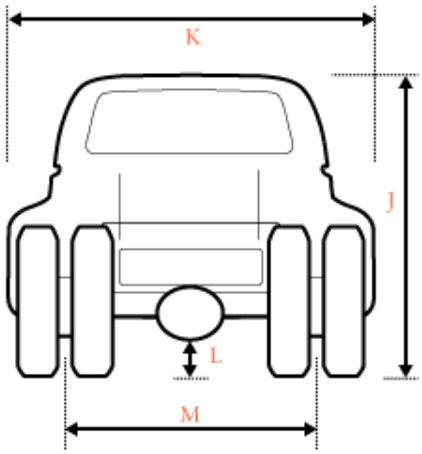

Dimensions

A	Front of Bumper to Front Axle	39.00 in.
B	Front Bumper to Back of Cab (BBC)	134.00 in.
C	Wheelbase (WB)	215.00 in.
D	Overall Length (OAL)	329.00 in.
E	Back of Cab to Rear Axle (CA)	120.00 in.
F	Back of Cab to End of Frame	195.00 in.
G	Rear Axle to End of Frame (AF)	75.00 in.
H	Frame Section Height	10.40 in.
I	Rear Frame Height Unloaded	38.20 in.
I	Rear Frame Height Loaded	36.80 in.
J	Cab Height	95.10 in.
K	Body Width	96.70 in.
L	Maximum Ground Clearance	N/A
L	Minimum Ground Clearance	N/A
M	Front Tread	83.50 in.
M	Rear Tread	72.70 in.

Prices and content availability as shown are subject to change and should be treated as estimates only. Actual base vehicle, package and option pricing may vary from this estimate because of special local pricing, availability or pricing adjustments not reflected in the dealer's computer system. See salesperson for the most current information.

2027 F-750 Diesel SuperCab Base (X7D)

Price Level: 715 | Quote ID: 26VL106

Vehicle Dimension and Performance Summary (cont'd)

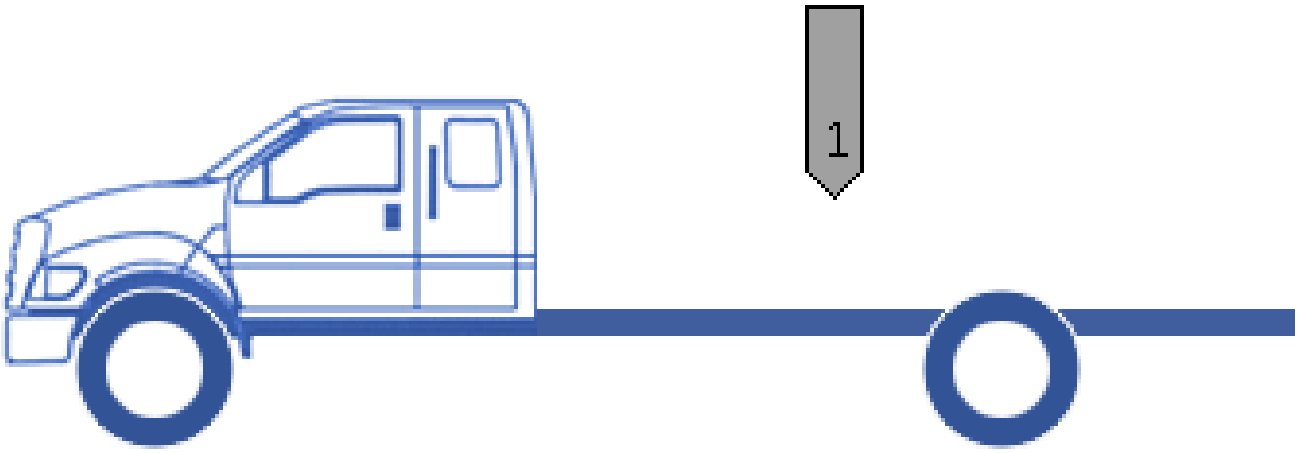

Weight

Licensing

GVWR exceeds 26,000 lbs and requires a Commercial Driver's License (CDL). Contact your local state commercial driver licensing office for specifics on what your state requires.

GVW	Front Axle	Rear Axle	Totals
Chassis	7,225 lbs	4,279 lbs	11,504 lbs
Body	0 lbs	0 lbs	0 lbs
Occupants Weight	500 lbs	250 lbs	750 lbs
1 Max Payload - (Max Payload)	4,275 lbs	16,471 lbs	20,746 lbs
TOTAL	**12,000 lbs**	**21,000 lbs**	**33,000 lbs**

Ratings	Front Axle	Rear Axle	GVWR
GAWR	**12,000 lbs**	**21,000 lbs**	**33,000 lbs**
Wheels/Tires	13,220 lbs	24,040 lbs	
Suspension	13,200 lbs	23,000 lbs	
Axle	12,000 lbs	21,000 lbs	
Legal Axle Limit	0 lbs	0 lbs	

Prices and content availability as shown are subject to change and should be treated as estimates only. Actual base vehicle, package and option pricing may vary from this estimate because of special local pricing, availability or pricing adjustments not reflected in the dealer's computer system. See salesperson for the most current information.

2027 F-750 Diesel SuperCab Base (X7D)

Price Level: 715 | Quote ID: 26VL106

Vehicle Dimension and Performance Summary (cont'd)

Start, Grade and Speed

Shift Indicator

Vehicle equipped **without** *Park Pawl. Shift indicator will display* **RNDM.**

Start	Ratio	Desired	Calculated
Start grade capability in 1st gear	4.62	15.00 %	26.54 %
Start grade capability in reverse	4.70	15.00 %	27.00 %

Grade	Ratio	Desired	Calculated
Maximum grade in 8th gear	0.85	3.00 %	4.97 %
Maximum grade in 9th gear	0.69	3.00 %	4.01 %
Maximum grade in 10th gear	0.63	3.00 %	3.69 %

Speed	Desired	Calculated
Top Speed (level grade)	75 mph	133 mph
To meet your requirement you need a maximum axle ratio of 8.66		
Top Speed on 3% grade	55 mph	
To meet your requirement you need a maximum of 198 hp		
Cruise Speed	60 mph	90 mph
Engine RPM at desired cruise speed		1,533 rpm

Variables in Use

Start

Rear axle ratio:	4.88	Clutch engagement torque:	425 ft.lbs.
Tire size:	11R22.5 (497 rev/mile)	Torque conversion ratio:	1.97
Gross Vehicle Weight (GVW):	33,000 lbs		

Grade

Rear axle ratio:	4.88	Gross Vehicle Weight (GVW):	33,000 lbs
Tire size:	11R22.5 (497 rev/mile)	Peak engine torque:	850 ft.lbs.

Speed

Engine Power:	330 hp @ 2,600 rpm	Worst road surface	Typical Highway
Governed RPM:	3,400 rpm	Final Drive Ratio:	0.63
Frontal Area:	57.82 ft²	Drag Coefficient	0.80
Cruising RPM	2,300 rpm		

Prices and content availability as shown are subject to change and should be treated as estimates only. Actual base vehicle, package and option pricing may vary from this estimate because of special local pricing, availability or pricing adjustments not reflected in the dealer's computer system. See salesperson for the most current information.

2027 F-750 Diesel SuperCab Base (X7D)

Price Level: 715 | Quote ID: 26VL106

Vehicle Dimension and Performance Summary (cont'd)

Turning Radius

Turning radius to curb:	28.41 ft
Turning radius to bumper:	30.09 ft

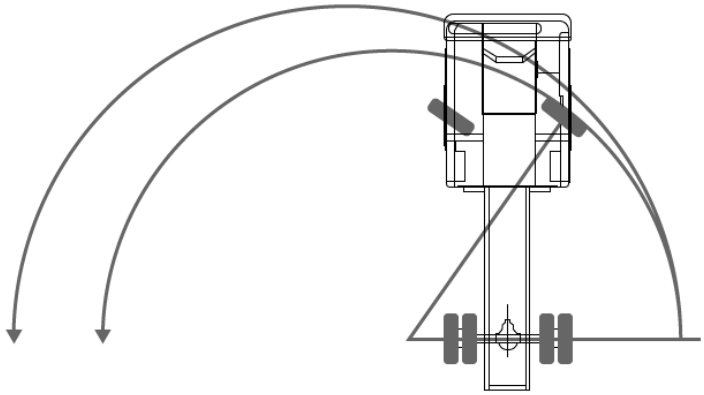

Prices and content availability as shown are subject to change and should be treated as estimates only. Actual base vehicle, package and option pricing may vary from this estimate because of special local pricing, availability or pricing adjustments not reflected in the dealer's computer system. See salesperson for the most current information.

2027 F-750 Diesel SuperCab Base (X7D)

Price Level: 715 | Quote ID: 26VL106

Major Equipment

(Based on selected options, shown at right)
10-speed automatic

Exterior: Oxford White
Interior: Gray

* Side assist steps
* White front wheels
* Steel rear wheels
* English measure truck 279/82R22.5 AS BSW front and rear tires
* Overdrive transmission
* Lock-up transmission
* Alternator Amps: 240A
* Low-speed ABS traction control
* Dual lead acid battery
* Engine block heater
* Auxiliary power take-off
* Steering wheel mounted audio controls
* AM/FM
* Auxiliary input jack
* Vehicle body length: 329.0"
* Cab to axle: 120.0"
* Axle capacity rear: 21,000 lbs.
* Axle capacity front: 12,000 lbs.
* Standard ride suspension
* Single air horn
* 22.5 x 8.25-inch front and dual rear wheels
* White rear wheels
* Disc rear wheel
* Front tires LT load rating: H
* PTO transmission provision
* Transmission electronic control
* Aluminized steel single exhaust
* Battery rating: 1800CCA
* Battery run down protection
* Engine retarder system
* Fuel/water separator
* Wireless audio streaming
* Seek scan
* External memory control
* Wheelbase: 215.0"
* Axle to end of frame: 75.0"
* Tire/wheel capacity rear: 24,040 lbs.
* Spring rating front: 13,200 lbs.
* Trip computer
* Power door mirrors

As Configured Vehicle

	MSRP
STANDARD VEHICLE PRICE	$83,170.00
Preferred Equipment Package 600A	N/C
50-State Emissions	N/C
Ford TorqShift HD 10-Speed Automatic - with PTO Provision	STD
Wheels, Front 22.5" X 8.25" White Powder Coated Steel, 10-Hole	STD
Tires, Front Two 11R22.5H Goodyear Fuel Max RSA (497 Rev/Mile)	STD
Wheels, Rear 22.5" X 8.25" White Powder Coated Steel, 10-Hole	STD
Tires, Rear Four 11R22.5H Goodyear Fuel Max RSA (497 Rev/Mile)	STD
21,000 Lb. Single Reduction - Open - Dana / Spicer 21060S	STD
Under Cab, Right Side Outlet, Switchback-Style	STD
Fuel Tank - LH 65 Gallon Rectangular - Aluminum	STD
14 Gal. Single Tank Fuel Fill. Mandatory Charge Applied, Based on Tank Selection	$0.00
Embedded Modem Delete	-$75.00
30/0/30 Fixed Driver & Fixed Passenger w/Consolette - Vinyl	STD

Prices and content availability as shown are subject to change and should be treated as estimates only. Actual base vehicle, package and option pricing may vary from this estimate because of special local pricing, availability or pricing adjustments not reflected in the dealer's computer system. See salesperson for the most current information.

2027 F-750 Diesel SuperCab Base (X7D)

Price Level: 715 | Quote ID: 26VL106

Major Equipment

* Heated driver and passenger side door mirrors
* Daytime running lights
* Variable intermittent front windshield wipers
* Manual climate control
* 60-40 folding rear seats
* Fold-up rear seat cushion
* Driver seat armrest
* Bucket driver seat
* Low driver seat back
* Manual fore/aft
* Fixed passenger seat back
* 2 passenger seats way-direction
* Vinyl front seat upholstery
* Air brake system
* Manual folding door mirrors
* Light tinted windows
* Speed sensitive wipers
* Fixed rear seats
* Front facing rear seat
* Split-bench rear seat
* Front passenger seat armrest
* Folding driver seat back
* 4 driver seats way-direction
* Bucket passenger seat
* Low passenger seat back
* Manual fore/aft
* Carpet front seatback upholstery
* 4-wheel antilock (ABS) brakes

Fuel Economy

City
N/A

Hwy
N/A

As Configured Vehicle

	MSRP
60/40 Rear Bench Seat w/Bolster and Flip-Up Cushion	Included
Radio: AM/FM Stereo w/2 Speakers, USB Input, Clock Display and Bluetooth	STD
Bumper, Front - Black, Full Width	Included
Wheel Seals, Front - Oil Lubricated, SKF ScotSeal PlusXL Seals	Included
Wheel Seals, Rear - Oil Lubricated, SKF ScotSeal PlusXL Seals	Included
Manual Regen Initiation - Driver Interface in Message Center	Included
Engine Exhaust Brake	Included
Painted Grille - Plastic	Included
Lights - Roof Marker/Clearance - Amber Lenses, 5 Lights	Included
Tow Hooks, Front (2) - Frame-Mounted, Painted Black	Included
Four Body Builder Switches - Mounted in Center Instrument Panel	Included
Floor Covering - Black Vinyl	Included
Intelligent Oil Life Monitor	Included
Steering Column - Tilt / Telescoping	Included

Prices and content availability as shown are subject to change and should be treated as estimates only. Actual base vehicle, package and option pricing may vary from this estimate because of special local pricing, availability or pricing adjustments not reflected in the dealer's computer system. See salesperson for the most current information.

Prepared by: Zach Perkovich
04/02/2026

Pritchard Auto Company | 980 Highway 18 East Britt Iowa | 504238700

2027 F-750 Diesel SuperCab Base (X7D)

Price Level: 715 | Quote ID: 26VL106

As Configured Vehicle	MSRP
Steering Wheel - Black PVC w/Integral Cruise Control Switches, Includes Audio Controls	Included
6.7L Power Stroke V8 Turbo Diesel - 330 HP @ 2600 RPM	$3,495.00
Air Brakes (4 WHEEL DRUM) - Straight Truck w/Traction Control	$2,530.00
12,000 Lb. Cap. Non-Driving - Dana E-1202I - I-Beam Type	$525.00
Multi-Leaf Springs - 23,000 Lb. Cap	$230.00
215" Wheelbase/120" CA/75" AF/329" OAL	$320.00
Single Channel - Straight 'C' 20.11 SM, 120,000 PSI	$1,075.00
Battery - Two 900 CCA, 1800 Total, Includes Steel Battery Box	$120.00
Mirrors, Dual - Heated & Motorized Rectangular, XL2020 - 102" Width	$215.00
Paint Type - Environmentally Friendly, "3 - Wet System"	STD
Gray	N/C
Oxford White	N/C
Engine Block Heater, Phillips, 120 Volt/750 Watt	$155.00
Active Regen Control	$205.00
Electronic Stability Control DELETE	-$290.00

Prices and content availability as shown are subject to change and should be treated as estimates only. Actual base vehicle, package and option pricing may vary from this estimate because of special local pricing, availability or pricing adjustments not reflected in the dealer's computer system. See salesperson for the most current information.

2027 F-750 Diesel SuperCab Base (X7D)

Price Level: 715 | Quote ID: 26VL106

As Configured Vehicle	MSRP
Air Dryer, Bendix AD/IS w/Heater	Included
Trailer Connection Socket - 7-Way, Wired For Turn Signals Combined with Stop	$100.00
Taper-Leaf Springs, Parabolic - 13,200 Lb. Cap	$365.00
Lube, Front Axle, EmGard 50W, Synthetic Oil	$50.00
Lube, Rear Axle, EmGard 75W-90, Synthetic Oil	$100.00
4.88 Axle Ratio	N/C
Extra Heavy Duty Alternator - 12-Volt, 240 Amps	$410.00
Body Builder Wiring - At End of Frame, Combined - (ILO Standard - Back of Cab Combined)	$135.00
Back-Up Alarm - Electric, 102 dBA	$110.00
Daytime Running Lamps (Not Configurable)	$25.00
Vehicle Integration System 1.0	$320.00
Voltmeter	$100.00
Appearance Group	$910.00
Chrome Trimmed Air Registers w/Positive Shut-Off	Included
Power Equipment Group - (Included in (90A) Appearance Group)	Included
Remote Keyless Entry	Included
110 A/C Outlet - in Lower Center Finish Panel	$130.00

Prices and content availability as shown are subject to change and should be treated as estimates only. Actual base vehicle, package and option pricing may vary from this estimate because of special local pricing, availability or pricing adjustments not reflected in the dealer's computer system. See salesperson for the most current information.

Prepared by: Zach Perkovich
04/02/2026

Pritchard Auto Company | 980 Highway 18 East Britt Iowa | 504238700

2027 F-750 Diesel SuperCab Base (X7D)

Price Level: 715 | Quote ID: 26VL106

As Configured Vehicle	MSRP
Horn, Air - Black, Single Trumpet	$90.00
SUBTOTAL	$94,520.00
Destination Charge	$2,495.00
TOTAL	**$97,015.00**

Prices and content availability as shown are subject to change and should be treated as estimates only. Actual base vehicle, package and option pricing may vary from this estimate because of special local pricing, availability or pricing adjustments not reflected in the dealer's computer system. See salesperson for the most current information.

2027 F-750 Diesel SuperCab Base (X7D)

Price Level: 715 | Quote ID: 26VL106

Warranty

Standard Warranty

Basic Warranty

Basic warranty	24 months/unlimited

Powertrain Warranty

Powertrain warranty	24 months/unlimited

Corrosion Perforation

Corrosion perforation warranty	36 months/unlimited

Roadside Assistance Warranty

Roadside warranty	24 months/unlimited

Diesel Engine Warranty

Diesel engine warranty	60 months/250,000 miles

Transmission Warranty

Transmission warranty	60 months/250,000 miles

Frame Rail Warranty

Frame Rail Warranty	60 months/unlimited

Prices and content availability as shown are subject to change and should be treated as estimates only. Actual base vehicle, package and option pricing may vary from this estimate because of special local pricing, availability or pricing adjustments not reflected in the dealer's computer system. See salesperson for the most current information.